300 S. DAYTON ST.
DAVISON, MI 48423
PH: 810-653-9626
FAX:810-654-2616

QC-9.75

DESCRIPTION:

Debris Cap

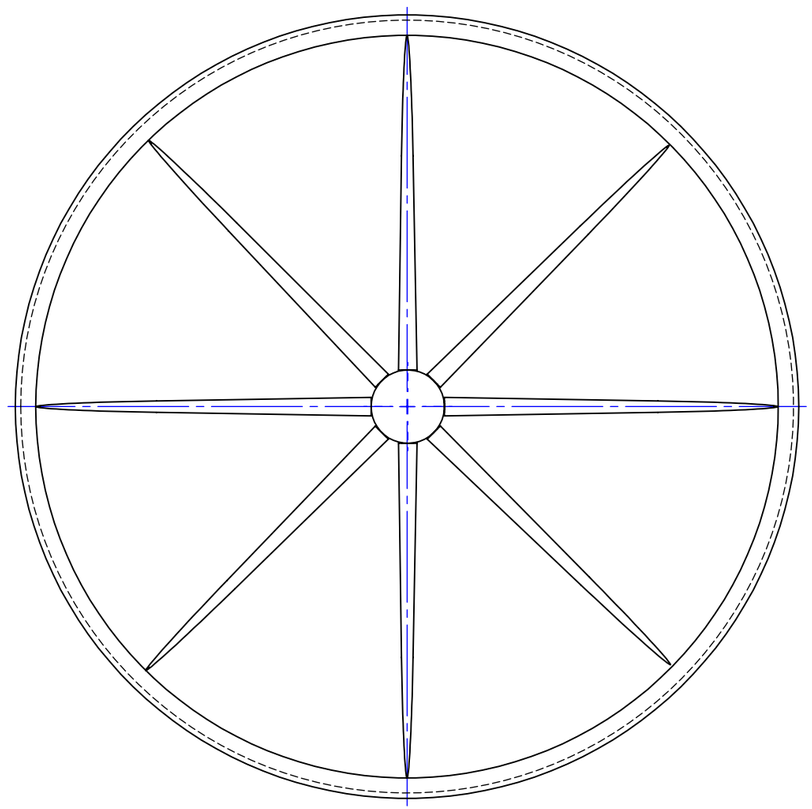

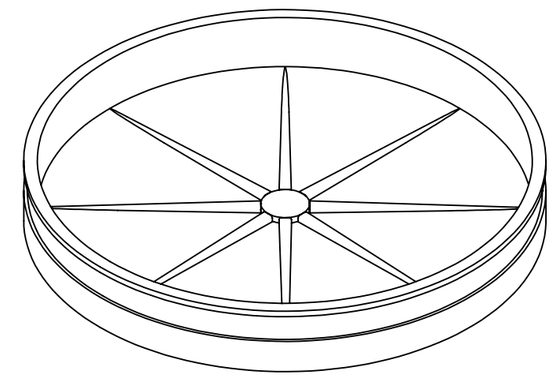

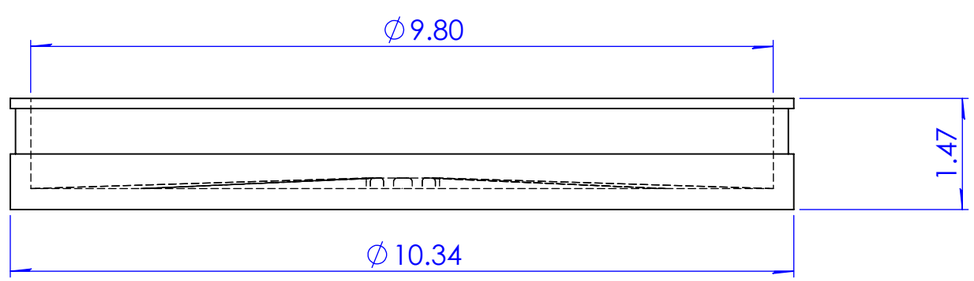

PROPRIETARY AND CONFIDENTIAL
THE INFORMATION CONTAINED IN THIS DRAWING IS THE SOLE PROPERTY OF FERNCO, INC. ANY REPRODUCTION IN PART OR AS A WHOLE WITHOUT THE WRITTEN PERMISSION OF FERNCO, INC. IS PROHIBITED.

TOLERANCES:
.X= Fractional ±
.XX= ±.06
ANG.= ±3°
UNLESS OTHERWISE SPECIFIED

Part Weight	1.64 lbs.	Installation Torque	60" Lbs.
Min/Max Temp.	-30/140 Degrees F	Conforms to ASTM	D5926
		Clamps used	300 Series Stainless
Material	Flexible PVC 60 Duro Shore A	Box Quantity	

UNITS: INCHES
SIZE: A
3RD ANGLE PROJECTION
DO NOT SCALE DRAWING

DESIGNER: T. Dipzinski
CHECKER:
DATE: 12/3/2013
SCALE: not to scale
SHEET 1 OF 1